A9700 Automotive

Exploded view with

Parts List

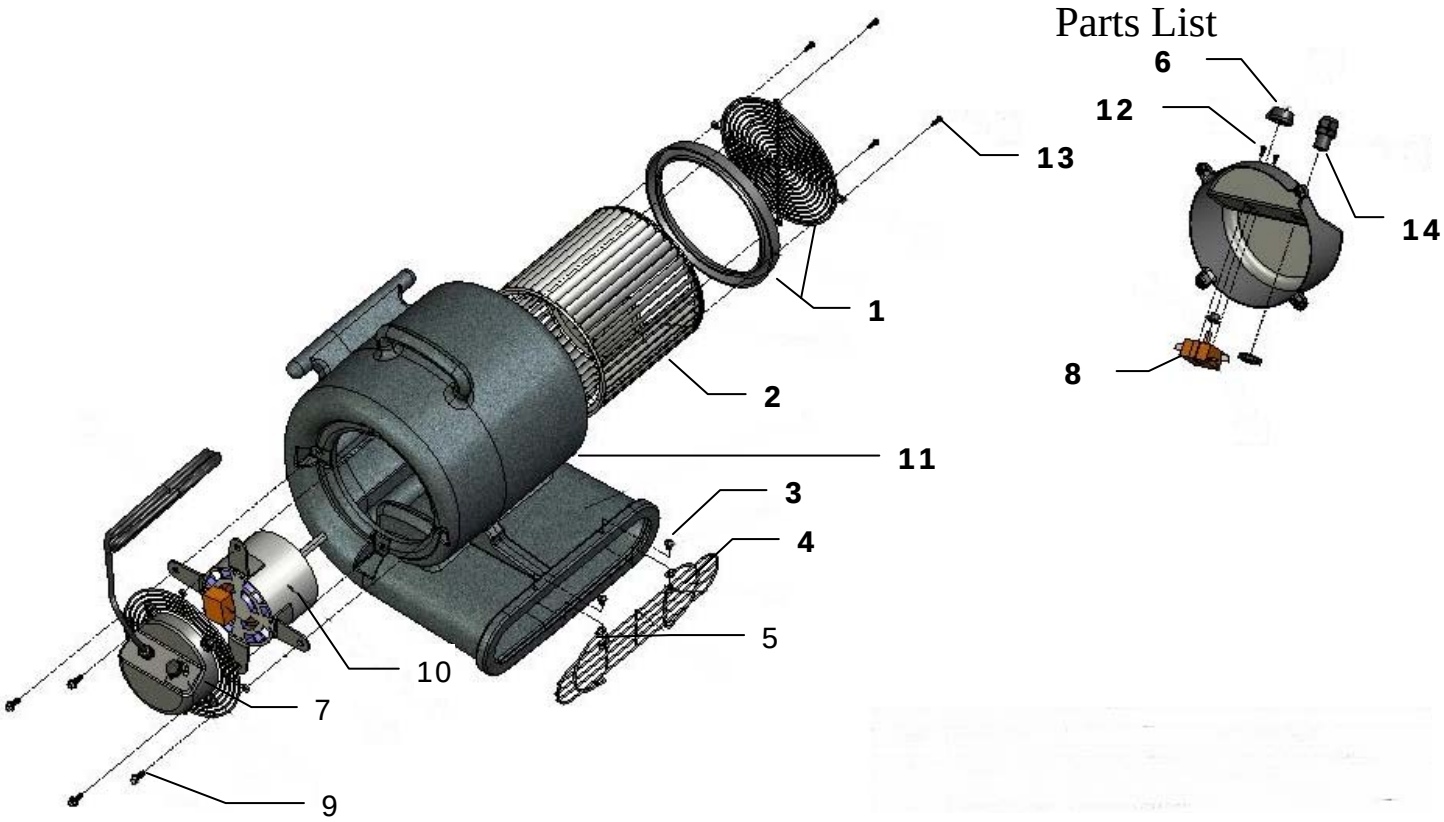

Item	Description	Qty Req.	Viking Part#	Item	Description	Qty Req.	Viking Part#
1	Guard, Fan Side	1	A956A	**9**	Flange Bolt, 1/4-20x3/4	4	1/4-20x3/4 FLG
2	Blower Wheel, SM Metal	1	H323CC	**10**	Motor, 1/3 HP	1	AB033002
3	Bolt, 1/4-20x3/4 Hex Head	2	1/4-20x3/4	**11**	Housing, SM Grey Granite	1	SM GGR
4	Front, Guard	1	H339	**12**	Screw, 4x1/2 Txp, Black Switch E543	2	4X1/2 TXP
5	1/4-20 Nylon Nut	2	1/4-20 NYL	**13**	Screw, 8-15x3/4	4	8-15x3/4
6	Knob, comes with A955AA	1	E504	**14**	Strain Relief, comes with A955AA	1	H220
7	Guard, Black Cord	1	A955AA	**15**	Strap, Hanging	1	Strap
8	Switch, 4-Position	1	E543				