2300 Windjammer

Exploded view with
Parts List

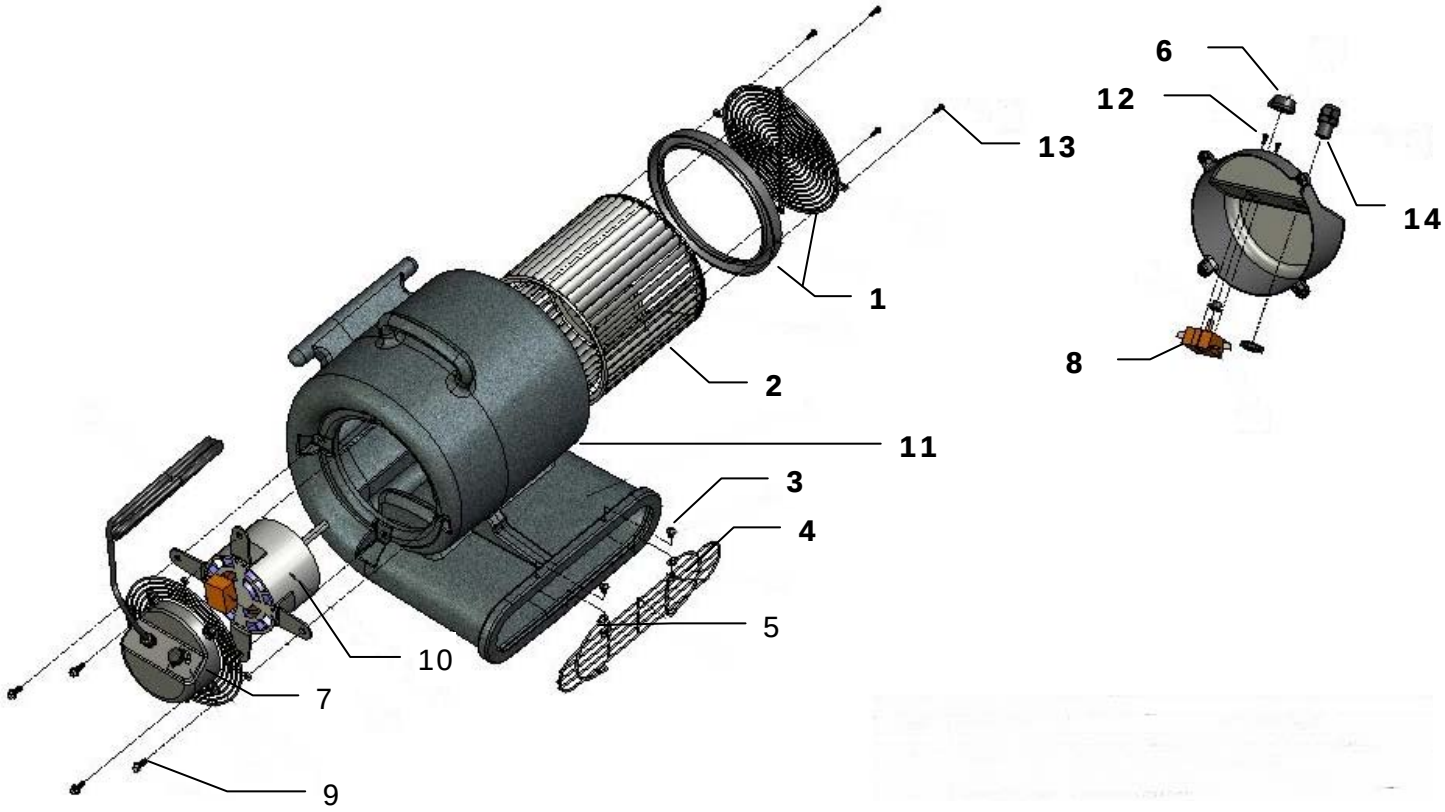

Item	Description	Qty Req.	Viking Part#	Item	Description	Qty Req.	Viking Part#
1	Guard,Fan Side	1	A956A	**8**	Switch, 4-Position	1	E543
2	Blower Wheel, SM Metal	1	H323CC	**9**	Flange Bolt, 1/4-20x3/4	4	1/4-20x3/4 FLG
3	Bolt, 1/4-20x3/4 Hex Head	2	1/4-20x3/4 118	**10**	Motor, 1/2 HP 115V	1	AB050006
4	Front, Guard	1	H339	**11**	Housing,SM Grey Granite	1	SM GGR
5	1/4-20 Nylon Nut	2	1/4-20 NYL	**12**	Screw, 8-15x3/4 TSW	4	8-15x3/4
6	Knob, comes with A955AA	1	E504	**13**	Screw, 4x1/2 TXP, Black Switch E543	2	4X1/2 TXP
7	Guard, Black Cord	1	A955AA	**14**	Strain Relief, comes with A955AA	1	H220